A NEW PARADIGM IN LIGNOCELLULOLYTIC ENZYME COCKTAIL OPTIMIZATION

Le Gao, Zhuohang Yu, Shengjie Wang, 2023

PRESENTED BY
Princic Elisa (886476), Torre Andrea (886051)

BIG DATA IN BIOTECHNOLOGY & BIOSCIENCES
A.A. 2025 - 2026

OVERVIEW

1 The paper

- **Goal**
- **Approach**
- **Results of** the study

2 The data

- **Structure** of the dataset
- The enzymes – **T.reesei A2H**

3 Methodology

- Embedding and Attention
- Residual connections
- Contrastive learning
- Clustering

4 Results

- Our **models** and their performances
- **Comparision** with the paper

WHY?

The proposed approach introduces unsupervised deep learning for biorefining of lignocellulosic biomass. It offers optimal enzyme cocktails without the need for exhaustive lab experiments or deep mechanistic understanding.

HOW?

- **EA-net Model**: Model interactions between enzyme cocktails and biomass substrates
- **Contrastive Learning**: Learn to group similar combinations without labels
- **Multi-Clustering Strategy**: Apply multiple clustering algorithms , combine via voting

RESULTS!

- **High Precision**: Achieved 91.98% precision in predicting high-performing enzyme-cocktail-substrate combinations
- **Efficiency**: Rapidly narrowed down the search space for experimental validation
- **Robustness**: Validated on multiple datasets with different enzyme distributions

STRUCTURE OF THE DATASET

There are 77 unique substrates and 30 enzymes combinations. Each substrate is associated to each cocktail resulting in 2310 total rows.

10 columns total:

- 6 about the substrate composition and structure: substrate, cellulose, hemicellulose, lignin, CRL and HBI indexes;
- 4 about the enzymes' code reference.

There are **11 enzymes** with an additional **dummy** variable to fill the cell when cocktails have less than 4 enzymes.

Each cocktail has a specific enzyme: **T. reesei A2H**, which has been engineered and produced in the lab in collaboration with the authors.

THE STRUCTURE OF THE ALGORITHM

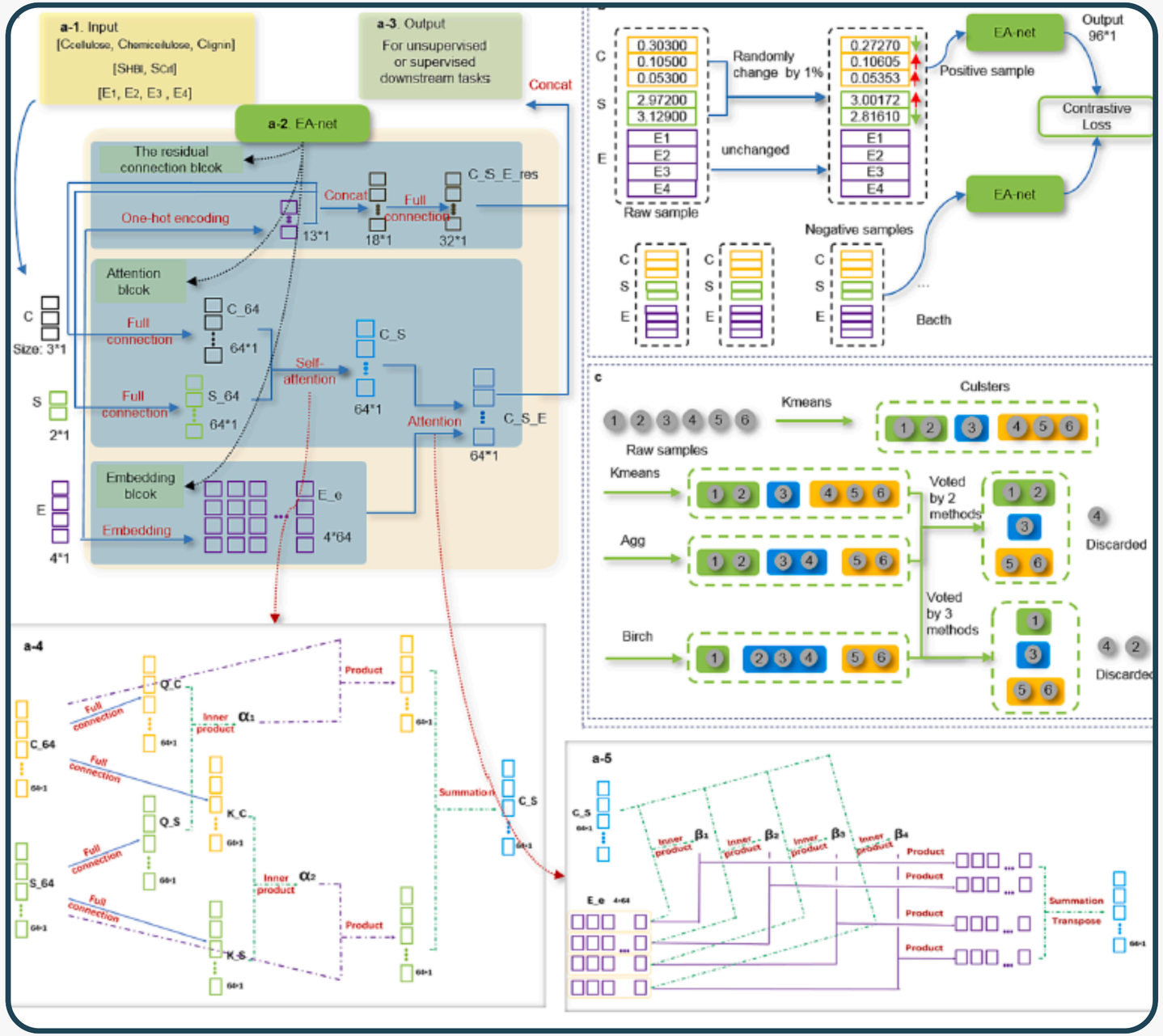

INDEX METHODOLOGY

1. Embedding of structure, composition and enzymes
2. Self-attention to catch interactions between compostion and structure, and between their output and the enzyme
3. Residual connection of the original features
4. Contrastive learning and projection head
5. Clustering

EMBEDDING AND ATTENTION

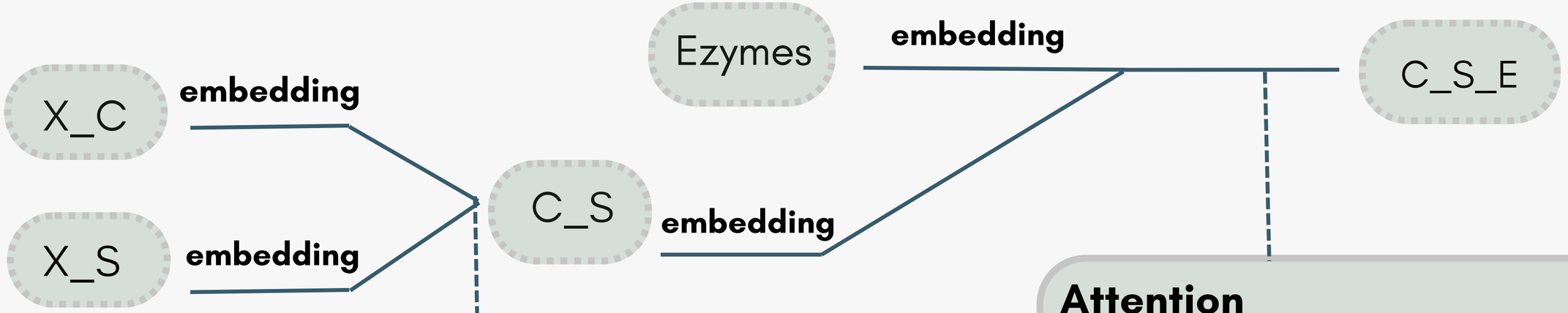

Where **X_C** is composed by cellulose, hemicellulose, lignin, while **X_S** by CRL and HBI indexes

Self-attention

Q_C * Q_S → α_1
K_C * K_S → α_2

C_S is given by the weighted summation of X_C and X_S with the weights.

Attention

How does the structure interacts with the enzymes?
The inner product between the four 64 dimensioanl components of E with C_S produces 4 weights :

$$\beta_1, \beta_2, \beta_3, \beta_4$$

RESIDUAL CONNECTIONS

One-hot enconding of the 4 enzymes' codes vectors which are then are **flattened** in order to obtain a single vector representing the enzymatic cocktail

Concatenation of the X_C and X_S, with the E_onehot_flat to have a **single tensor** with all the original information (5x5x52)

The output of the previous step is then passed to a **dense layer**, producing a representation with **32 dimensions**. This is crucial because, by using embeddings and attention, there might be a loss of information.

Output: compact tensorial representation of the original features

CONTRASTIVE LEARNING

Goal: learn a representation that distinguish similar cocktails (through discriminant embeddings without labels). It follows the idea of **SimCLR**.

Each substrate sample is paired with an altered version, where the values are modified by 1%. The model learns to represent them close in space. More generally:

- **Positive**: similar samples should be close to each others;
- **Negative**: different sample are distant form each others.

PROJECTION HEAD

A neural network projects the embedding in a space for the constrastive loss:

$$g(h) = W_2(ReLU(W_1 h))$$

The goal is to separate the spatial representation of the features from the representation used for the constrastive loss. This step improves the quality of the encoding.

CLUSTERING

After the creation of the cocktails, they are **clustered** and compared. The goal is to verify which one has the **highest** sugar yield.

How does it work?

- **Three** different algorithms are applied to the data: **KMeans**, **Agglomerative clustering**, and **BIRCH**;
- Each of them divide the cocktails in **three clusters**;
- A cocktail belongs to a groups if it has been assigned to it by **at least two** algorithms. 2001 combinations are kept;
- From the sugar yields obtained in the lab*, we calculate the **average value** for each cluster

THE SUGAR YIELD

The **original** sugar yileds values were obtained by **lab procedure** and the data used by the authors are **classified**.
Since we needed them to complete the project, we asked ChatGPT to generate **plausible** values. To do so, it developed the following procedure:

1. **Input: Chemical-physical characteristics and the enzymes**
2. **Determisistic rules**
3. **Random noise**
4. **Output: sum of the values from point 2 and 3, then normalization**
5. **Division into three classes**

The substrate are **classified** into three **categories**: low, medium, high.

THE MODELS

Five different classifications methods are used to evaluate the embeddings' representation:

Accuracy:

- **Random Forest** : 0.916
- SVM: 0.413
- AdaBoost: 0.623
- Gradient Boosting: 0.899
- KNN: 0.866

The embeddings are informative and robust but also well organized in the geometric space.

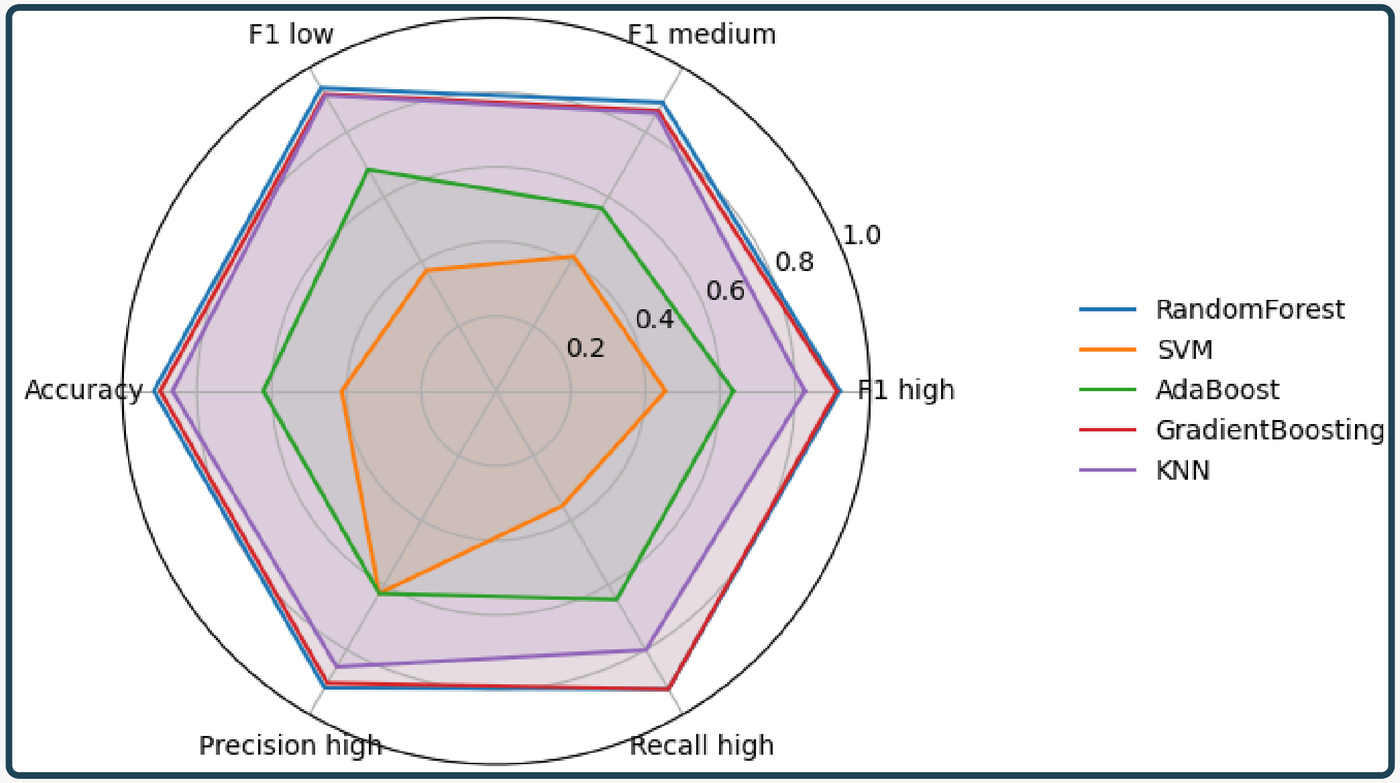

N.B. Split 70% train and 30% test

COMPARISION WITH THE PAPER

Clearly, since the starting data were different, we can't really compare the results but we can look at the 'patterns' and how high our values

THE PAPER

Quantitatively, the model achieves high predictive performance, with 91.98% precision, 80% recall of the top-100 highest-yield combinations, and 89.81% recall of optimal combinations per substrate, demonstrating strong generalization across diverse biomasses despite the fully unsupervised setting.

OUR PROJECT

Our replicated supervised models show performance comparable to the reference work, with ensemble methods achieving 90% overall accuracy and F1-scores >0.91 on the high-yield class, thus matching the strong predictive capability reported in the paper, while highlighting that such performance is obtained here in a supervised setting, in contrast to the fully unsupervised approach of the original study.

THANK YOU !